SEALEY

THE TOOL COMPANY

PARTS INFORMATION

24L Oil Free Belt Drive Vertical Compressor 2hp

Model No. SAC24V

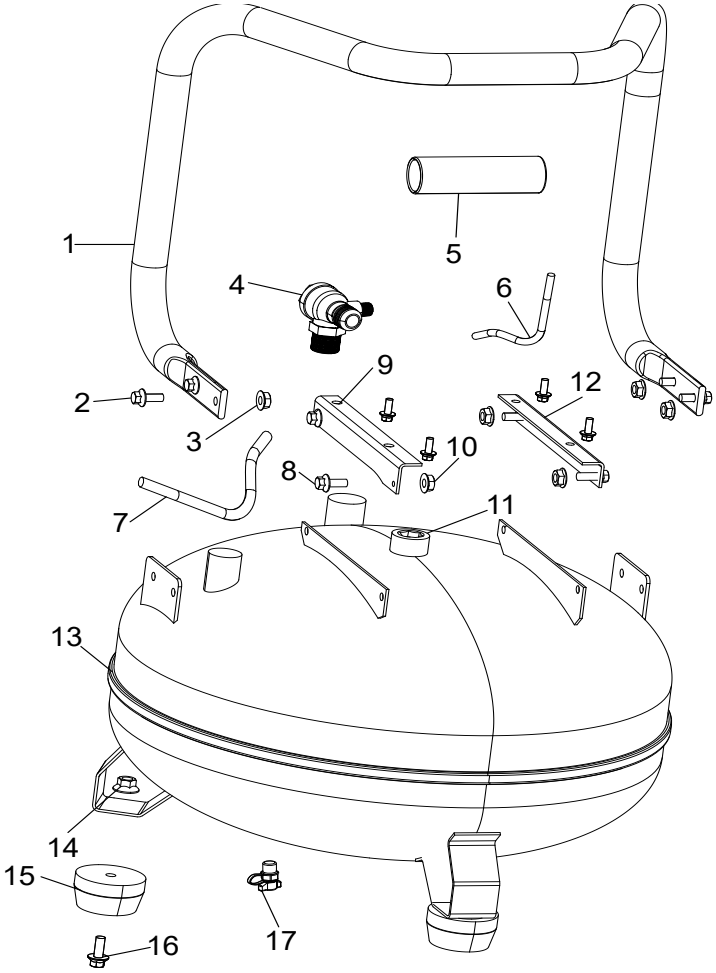

Item	Part No.	Description	Qty
1	SAC100V-01	Tank Handle	1
2	SFS612.S	Hex Head Flange Bolt M6 X 12 Zinc	8
3	FN6.S	Flange Nut Serrated M6 Zinc	4
4	SAC100V-04	Check Valve	1
5	SAC100V-05	Handle Grip	1
6	SAC100V-06	Unloading Pipe	1
7	SAC100V-07	Delivery Pipe	1
8	SFS512.S	Hex Head Flange Bolt M5 X 12 Zinc	4
9	SAC100V-09	Pump Bracket (Left)	1
10	FN5.S	Flange Nut Serrated M5 Zinc	4

Item	Part No.	Description	Qty
11	SAC100V-11	Inspection Block	1
12	SAC100V-12	Pump Bracket (Right)	1
13	SAC24V-13	Tank 24ltr	1
14	FN8.S	Flange Nut Serrated M8 Zinc	3
15	SAC100V-15	Rubber Foot	3
16	SFS825.S	Hex Head Flange Bolt M8 X 25 Zinc	3
17	SAC100V-17	Drain Valve	1
18	SAC100V-18	Fixed Wheel	2
19	FWM10.S	Flat Washer M10 Zinc	4
20	SAC100V-20	Split Pin	2

Note: It is our policy to continually improve products and as such we reserve the right to alter data, specifications and component parts without prior notice. See www.sealey.co.uk for the latest information.
Important: No liability is accepted for incorrect use of product. Spare parts must be fitted by a competent person.

Jack Sealey (EU) Ltd t/a Sealey Group Farney Street, Carrickmacross, Co. Monaghan, A81 PK68 Ireland
Jack Sealey Ltd t/a Sealey Group Kempson Way, Suffolk Business Park, Bury St Edmunds, Suffolk, IP32 7AR UK
Tel: 01284 757500 ▪ **Email:** sales@sealey.co.uk ▪ **Web:** www.sealey.co.uk

© Jack Sealey Limited

SEALEY

THE TOOL COMPANY

PARTS INFORMATION

24L Oil Free Belt Drive Vertical Compressor 2hp

Model No. SAC24V

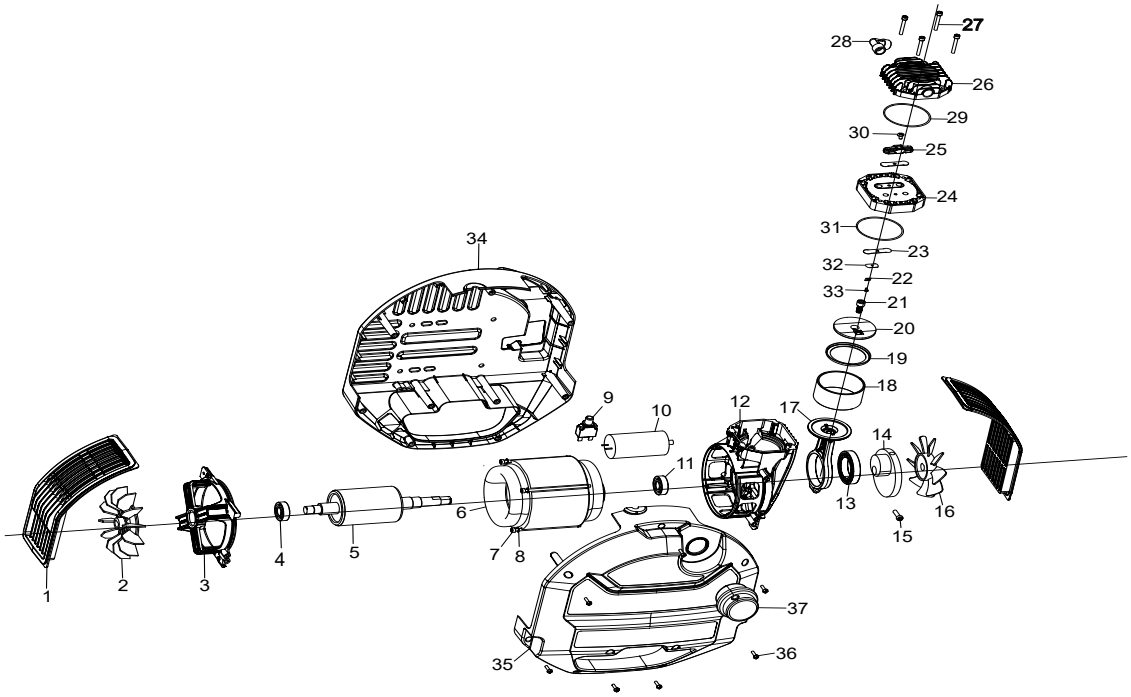

Item	Part No.	Description	Qty
1	SAC100V-P01	Fan Cover	1
2	SAC100V-P02	Motor Fan	1
3	SAC100V-P03	Motor Bracket	1
4	B/6202	Bearing 6202	1
5	SAC100V-P05	Rotor	1
6	SAC100V-P06	Stator	1
7	SAC100V-P07	External Hex Screw	4
8	SAC100V-P08	Spring Washer	4
9	SAC100V-P09	Thermal Trip Switch	1
10	SAC100V-P10	Capacitor	1
11	B/6204	Bearing 6204	1
12	SAC100V-P12	Crankcase	1
13	B/6007-2RS	Bearing 6007-2rs	1
14	SAC100V-P14	Crankshaft	1
15	SCB810.SB	Socket Cap Bolt M8 x 10mm Black	1
16	SAC100V-P16	Cooling Fan	1
17	SAC100V-P17	Connecting Rod	1
18	SAC100V-P18	Cylinder	1
19	SAC100V-P19	Piston Ring	1
20	SAC100V-P20	Fasten Plate (A)	1

Item	Part No.	Description	Qty
21	SCB614.S	Socket Cap Bolt M6 x 14mm	1
22	SAC100V-P22	Fasten Plate (B)	1
23	SAC100V-P23	Valve Reed	2
24	SAC100V-P24	Valve Plate	1
25	SAC100V-P25	Fasten Plate (C	1
26	SAC100V-P26	Cylinder Cover	1
27	SCB535.S	Socket Cap Screw M5 x 35mm	4
28	SAC100V-P28	Exhaust Elbow	1
29	SAC100V-P29	O-ring for Cylinder Cover	1
30	MSP48.S	Machine Screw Pan Head Phillips M4 X 8 mm	1
31	SAC100V-P31	O-ring for Cylinder	1
32	SAC100V-P32	Valve Retain Plate	1
33	MSP46.S	Machine Screw Pan Head Phillips M4 X 6mm	1
34	SAC100V-P34	Bottom Cover	1
35	SAC100V-P35	Top Cover	1
36	MSP416.S	Machine Screw Pan Head Phillips M4 x 16mm	7
37	SAC100V-P37	Muffler	1

Note: It is our policy to continually improve products and as such we reserve the right to alter data, specifications and component parts without prior notice. See www.sealey.co.uk for the latest information.
Important: No liability is accepted for incorrect use of product. Spare parts must be fitted by a competent person.

Jack Sealey (EU) Ltd t/a Sealey Group Farney Street, Carrickmacross, Co. Monaghan, A81 PK68 Ireland
Jack Sealey Ltd t/a Sealey Group Kempson Way, Suffolk Business Park, Bury St Edmunds, Suffolk, IP32 7AR UK
Tel: 01284 757500 ▪ **Email:** sales@sealey.co.uk ▪ **Web:** www.sealey.co.uk

© Jack Sealey Limited

SEALEY

THE TOOL COMPANY

PARTS INFORMATION

24L Oil Free Belt Drive Vertical Compressor 2hp

Model No. SAC24V

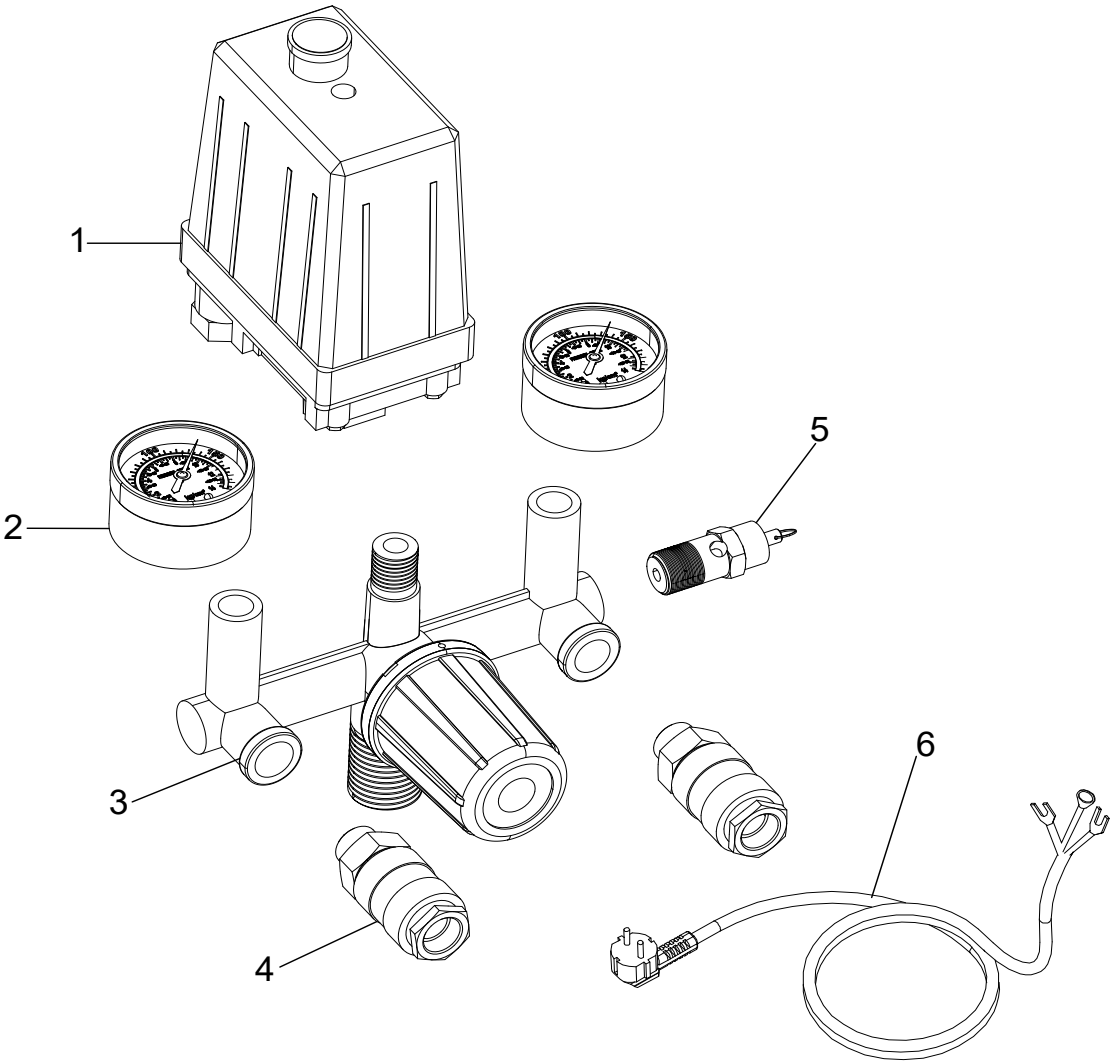

Item	Part No.	Description	Qty
1	SAC100V-SA01	Pressure Switch	1
2	SAC100V-SA02	Pressure Gauge d.40	2
3	SAC100V-SA03	Pressure Regulator Bracket	1

Item	Part No.	Description	Qty
4	SAC100V-SA04	Quick Coupling	2
5	SAC100V-SA05	Safety Valve	1
6	SAC100V-SA06	Power Cable	1

Note: It is our policy to continually improve products and as such we reserve the right to alter data, specifications and component parts without prior notice. See www.sealey.co.uk for the latest information.
Important: No liability is accepted for incorrect use of product. Spare parts must be fitted by a competent person.

Jack Sealey (EU) Ltd t/a Sealey Group Farney Street, Carrickmacross, Co. Monaghan, A81 PK68 Ireland
Jack Sealey Ltd t/a Sealey Group Kempson Way, Suffolk Business Park, Bury St Edmunds, Suffolk, IP32 7AR UK
Tel: 01284 757500 ▪ **Email:** sales@sealey.co.uk ▪ **Web:** www.sealey.co.uk

© Jack Sealey Limited